-MCLR pin must not be connected directly to VCC (it may be connected through resistor of 10 kOhm), the application circuitry must be tolerant to +13 V supplied to -MCLR.

PIC to CAPR-PI ICSP connector connection:

PIC	ICSP Connector
RB6	CLK
RB7	DATA
GND	GND
VCC	VCC
-MCLR	VPP

ICSP - application example:

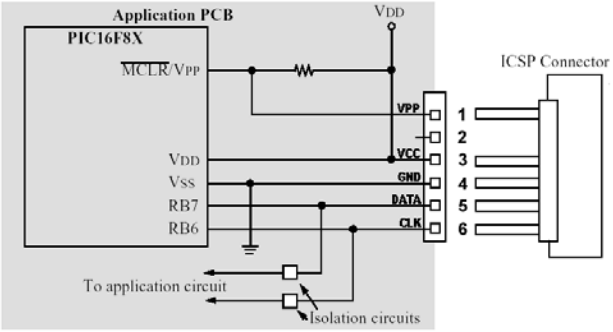

MANCAPR-PI_EN

CAPR-PI – PIC® ICSP Programmer

CAPR-PI is entry level, low cost development programmer for Microchip PIC® microcontrollers with Flash memory - PIC16F7xx, PIC16F8x, PIC16F8xx and PIC18Fxxx.

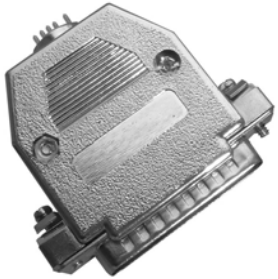

CAPR-PI is powered by a target application 5 V power supply and thus requires only to be connected to PC parallel port.

Software for the CAPR-PI programmer runs on Windows 95/98/ME/2K/XP. List of currently supported microcontrollers and possible updates to this manual are available at **http://www.pic-tools.com/**.

ASIX s.r.o.
Staropramenna 4, 150 00 Prague
Czech Republic
Tel.: +420 257 312 378
Fax: +420 257 329 116
E-mail: info@pic-tools.com, support@pic-tools.com, sales@pic-tools.com
WWW: http://www.pic-tools.com

1. Technical specification

- Communicates with host PC using standard parallel port (LPT)
- Power supply of 5 V (±10%) / 100 mA is drawn from target application, no external power supply needed
- Operating temperature: 5 to 50 °C
- Relative humidity (operating): max. 90 %

NOTE: CAPR-PI cannot be used for programming of PIC12Fxxx and PIC16F6xx devices. Programming algorithm of those devices does not allow powering the programmer from the target application.

2. Package contents for CAPR-PI

- Programmer
- ICSP cable
- CD-ROM with software and documentation
- This manual

3. Hardware installation

Turn off the computer. Connect the programmer to PC parallel port. Turn the computer back on. Connect the target application to programmer using the ICSP cable (see ICSP Programming paragraph below). Turn the target application power on.

4. Software installation

Insert the installation CD-ROM ASIX. If the inital screen is not displayed automatically, open **`ReadMeFirst!.rtf`** or **`Index.htm`** file located in the CD-ROM root directory manually and follow the instructions to install software for all ASIX' programmers - program **UP**.

5. Hardware operation

Turn off both the computer and target application power any time you are about to connect or disconnect the programmer.

Do not handle the part when it is being programmed or read! Operation in progress is indicated by yellow LED.

6. ICSP programming

ICSP (In-Circuit Serial Programming) is used to program the part directly in the target circuitry.

The application must meet certain conditions described below and in more in detail at CD-ROM ASIX and http://www.pic-tools.com/.

1. -MCLR/VPP pin of the microcontroller must be isolated from reset circuitry (e.g. by 10 kOhm resistor). During the programming +13 V is applied to this pin and rising edge of this signal must not be affected by the application circuitry.
2. RB6 and RB7 pins must be disconnected from the application circuitry during the programming (e.g. may be used as inputs).

Further, it must be ensured that there is log.0 on the "Low Voltage Programming" pin. Placement of this pin for particular device is RB3 for PIC16F7x/8xx and RB5 for PIC18Fxxx.